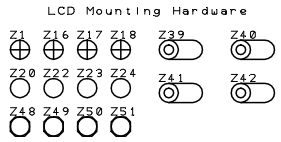


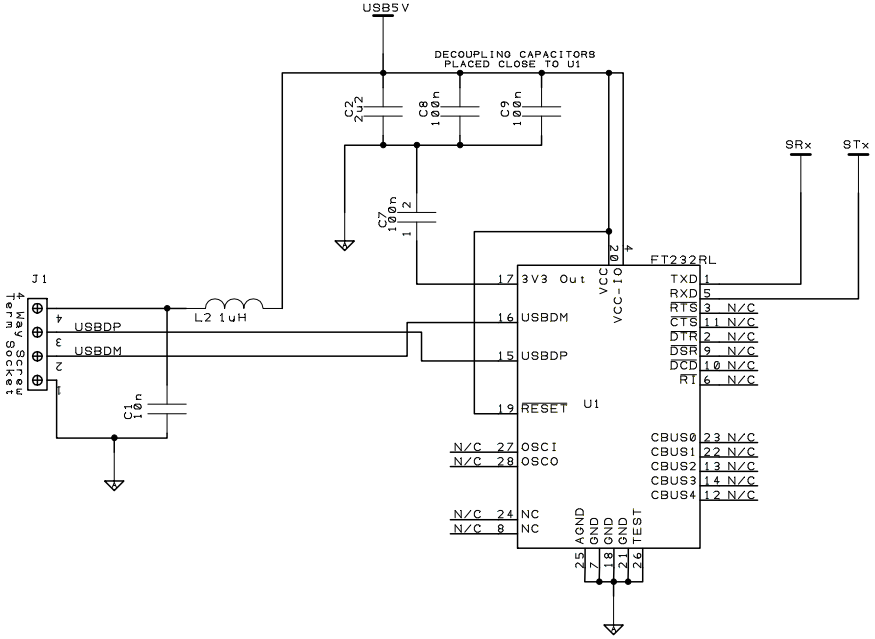


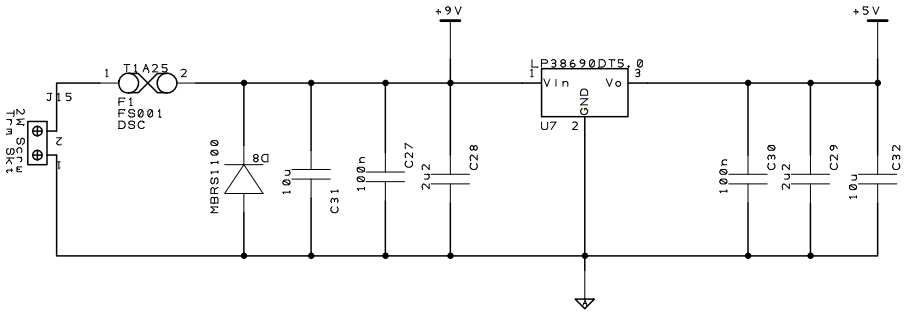


| Rev | ChNo | Drn | Date | Chk | Date |
|---|---|---|---|---|---|
| | | | | | |

| | | | | | |
|---|---|---|---|---|---|
| Project | Suitcheck module | | | Title | USB and PSU |
| Major Rev | 2 | Minor Rev | 0 | Filename | usb and psu.sch |
| Created | MPB | Date | 25Oct06 | ChNo | |
| Checked | MPB | Date | 25Oct06 | Batches | to |

Innovatronics Limited
Copyright 2006

Projection
Do Not Scale

Sheet 2 of 3